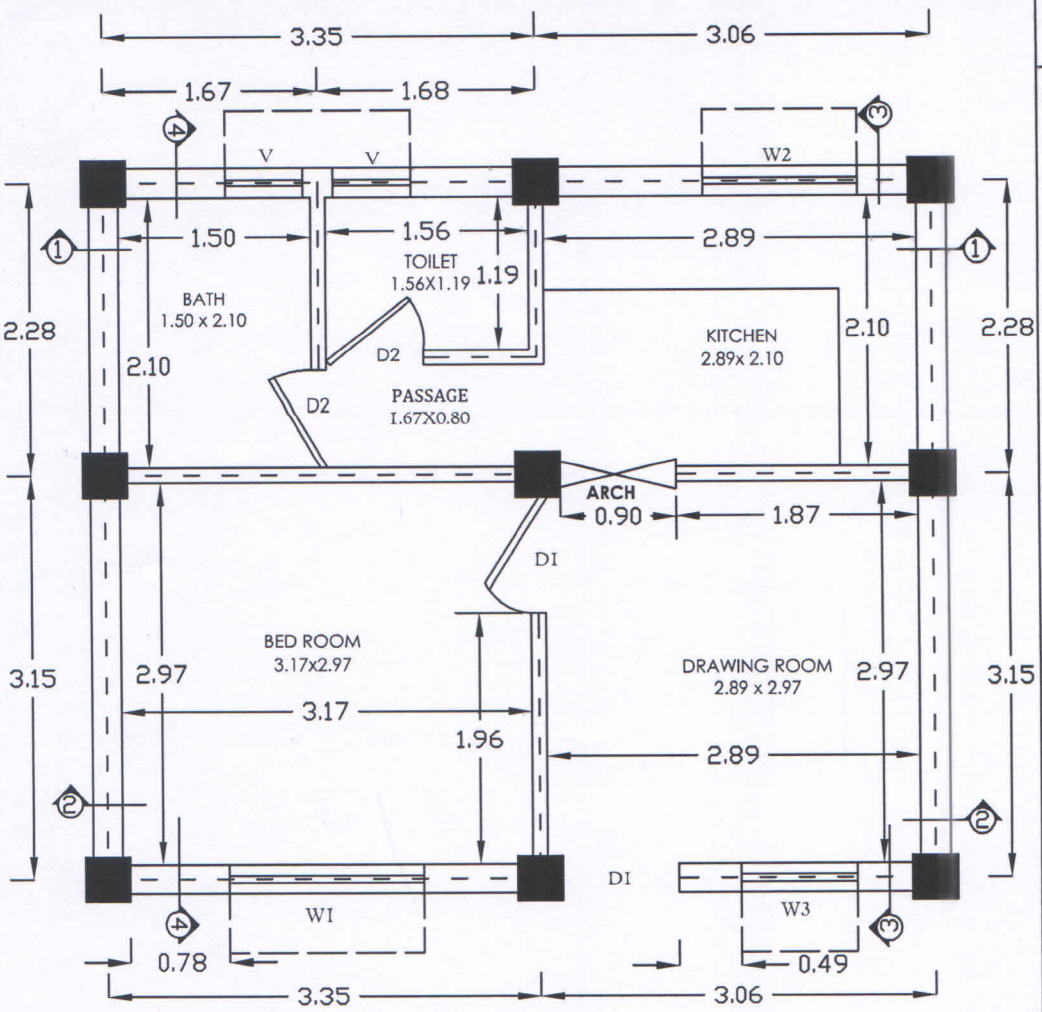

FLOOR PLAN DETAIL

Schedule of Door & Windows

Name	Lintel	Width	Sill lvl	Description
D1	2.10	0.90	--	
D2	2.10	0.75	--	
W1	2.10	1.50	0.90	
W2	2.10	1.20	0.90	
W3	2.10	0.90	0.90	
V	2.10	0.60	1.80	

NOTES:-

Clear height of DU = 2.85 m

Earthquake resistance structure as per site condition

* All the Dimensions in m

NOTES:-

- All dimensions are in m, unless wherever specified diameter of the bars shown in mm
- Dimensions are not to be scaled out, only written dimensions may be taken as correct.
- Nominal mix concrete 1:1.5:3 according IS 456 Clause 9.3
- The reinforcement shall be of high strength deformed steel bars conforming to IS:1786-2008
- Lap length and development length (L_d) for 8 mm Φ is 400 mm
- Second class brick must be used
- Mortar 1:5 according to Table 3 IS 4326-2013
- All walls are one Brick Thick Masonry walls or Autoclaved Aerated Block of Class 7.5
- Any discrepancy in the structural drawings should be correlated with architectural drawing.
- Refer DWG-2 to DWG-4 for earthquake resistance and structural detail.

DRG. No. - NIT/CED/2017/PMAY -OP3-RCC-FR-Z-V/DWG-1

NATIONAL INSTITUTE OF TECHNOLOGY HAMIRPUR

BUILDING NAME:
PMAY HFA
OPTION 3
RCC BUILDING
FLAT ROOF
ZONE V

DRAWING TITLE:
FLOOR PLAN

DESIGNED BY:
Dr. Pardeep Kumar
Dr. Hemant Kumar Vinayak

Dr. Hemant Kumar Vinayak
Assistant Professor
Department of Civil Engineering
National Institute of Technology,
Hamirpur -177005 (H.P.)

Dr. Pardeep Kumar
Associate Professor (Structural Engg.)
Civil Engineering Department
NIT, Hamirpur (H.P.)-177005

Sl. No.	Column	Transverse reinforcement	Sectional plan with longitudinal reinf. Footing to roof level
1.	C1	8Ø @100mm C/C "A" 8Ø@ 150mm C/C "B"	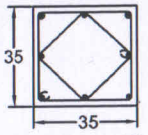

All Column Size are 35cm x 35cm and Grade is M20

Refer is 13920:2016 for following detail :-
"A"=Closer ties=Spacing of hoops
"B"=Spacing of hoops
hc=Floor height.
Sc=Special confining reinf.

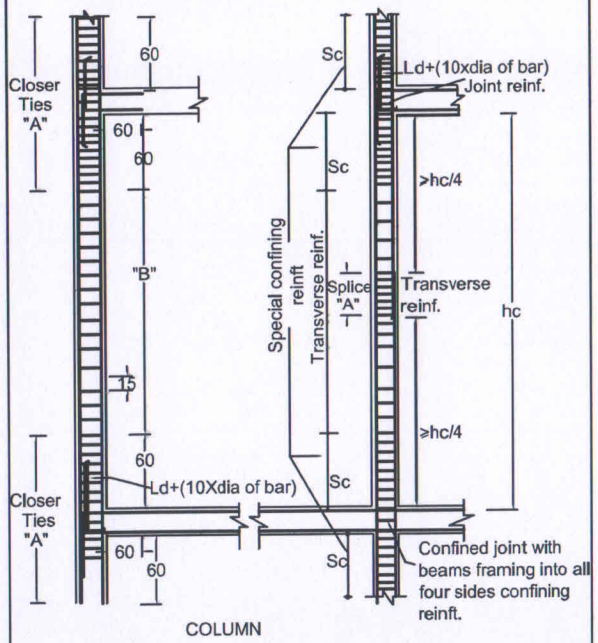

COLUMN

TYPICAL SKETCH AT COLUMN JUNCTION SHOWING SPLICES AND REINFORCEMENT DETAIL IN COLUMNS

CHART SHOWING DETAIL OF ISOLATED FOOTING REINFORCEMENT

Sr. No.	Name of footing	Size of column (bxd)	Size of footing (BXD)	Size of pit (B1XD1)	Thickness of footing T2	d-eff.	h	Spacing of reinf. parallel to x-x	Spacing of reinf. parallel to y-y
1.	F1	35 X 35	135 X 135	145 X 145	30	25	20	8Ø @ 175mm C/C	8Ø @ 175mm C/C

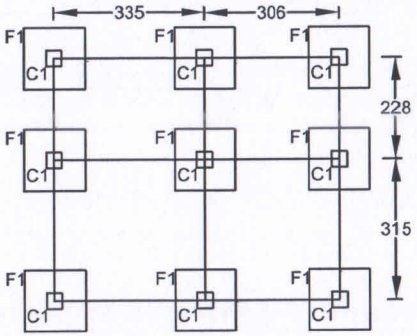

FOOTING PLAN

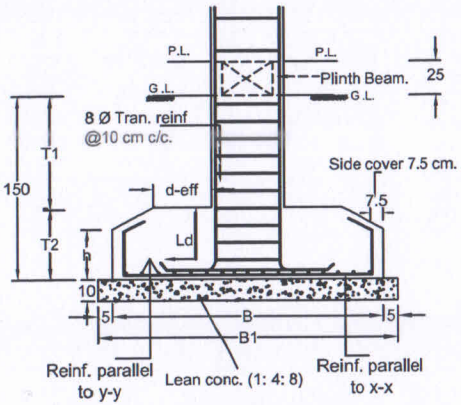

X- SECTION AT X-X

SHAPE OF STIRRUPS

DETAIL AT 'K'

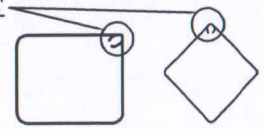

1. 2.

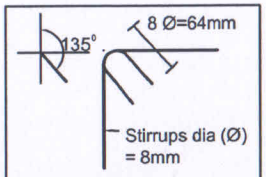

DETAIL AT 'K'

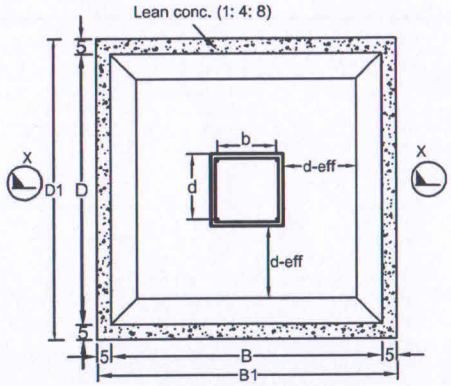

PLAN (VIEW AT A-A)

DETAIL OF ISOLATED FOOTING

Dr. Hemant Kumar Vinayak
Assistant Professor
Department of Civil Engineering
National Institute of Technology,
Hamirpur -177005 (H.P.)

Dr. Pardeep Kumar
Associate Professor (Structural Engg.)
Civil Engineering Department
NIT, Hamirpur (H.P.)-177005

NOTES:-

- All dimensions are in cm,unless wherever specified diameter of the bars shown in mm.
- Dimensions are not to be scaled out, only written dimensions may be taken as correct.
- Safe bearing capacity for design of footing is considered at 15 T/m² to be ensured at site.
- Grade of concrete M:20.
- The reinforcement shall be of high strength deformed steel bars conforming to IS:1786-2008.
- Minimum clear cover to the reinforcement including stirrups:-
  (i) Beam 25 mm
  (ii) Column 40 mm
  (iii) Footing 50 mm
- Lap length and development length (L_d)
  (i) For 16 mm Ø = 800
  (ii) For 12 mm Ø = 600
  (iii) for 8 mm Ø = 400
- The concrete shall be mechanically mixed and vibrated with water- cement ratio not exceeding 0.55.
- Incase the proposed building is at probable landslide prone area the soil should be retained properly with adequate retaining wall to prevent differential settlement of the foundation.
- Any discrepancy in the structural drawing should be correlated with architectural drawing

DRG. No. - NIT/CED/2017/OP-3-RCC-FR Z-V/DWG-2

NATIONAL INSTITUTE OF TECHNOLOGY HAMIRPUR

BUILDING NAME :
PMAY HFA
OPTION 3
RCC BUILDING
FLAT ROOF
ZONE V

DETAIL OF FOOTINGS & CLOUMN

DESIGNED BY:
Dr. Pardeep Kumar
Dr. Hemant Kumar Vinayak

DETAILED DRAWING OF REINFORCEMENT OF BEAMS AT PLINTH/ROOF LEVEL

S - 8 mm dia bars @ 100 mm c/c

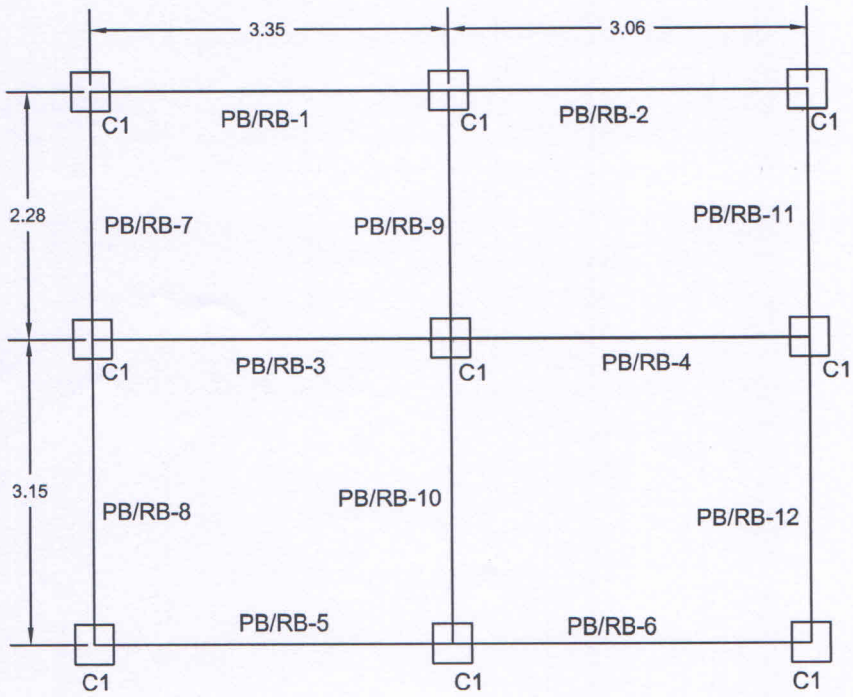

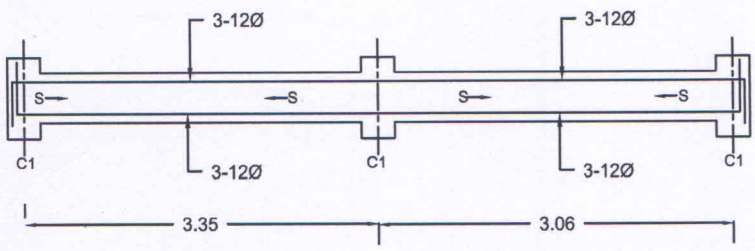

DETAIL FOR BEAM PB/RB-1 to PB/RB-6

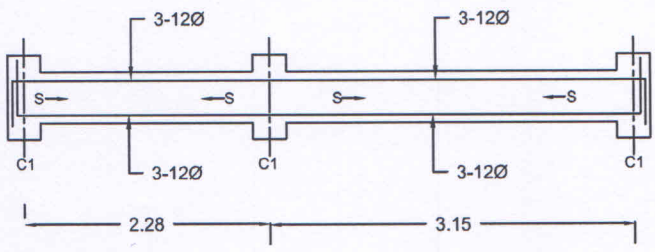

DETAIL FOR BEAM PB/RB-7 to PB/RB-12

NOTES :

- All dimensions are in meters,unless wherever specified diameter of the bars shown in mm.
- Dimensions are not to be scaled out, only written dimensions may be taken as correct.
- Size of Beam is 250 X 250 mm.
- Grade of concrete shall be M20.
- All reinforcement shall be of grade Fe 415 confirming to IS:1786-2008.
- Clear Cover to reinforcement shall be 25 mm.
- Bending and fixing of reinforcement shall be as per is:2502-1963.
- Lap length and anchorage length shall be 57 times the bar diameter
- Further refer notes from the drawing of 'Detail' of footings'.

DRG. No. - NIT/CED/2017/OP-3-RCC-FR Z-V/DWG-3

NATIONAL INSTITUTE OF TECHNOLOGY HAMIRPUR

BUILDING NAME :
PMAY HFA
OPTION 3
RCC BUILDING
FLAT ROOF
ZONE V

DETAIL OF PLINTH /ROOF BEAM

DESIGNED BY:
Dr. Pardeep Kumar
Dr. Hemant Kumar Vinayak

Dr. Hemant Kumar Vinayak
Assistant Professor
Department of Civil Engineering
National Institute of Technology,
Hamirpur -177005 (H.P.)

Dr. Pardeep Kumar
Associate Professor (Structural Engg.)
Civil Engineering Department
NIT, Hamirpur (H.P.)-177005

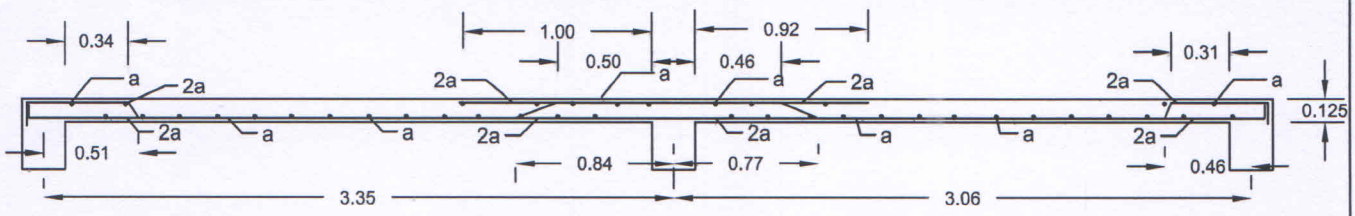

Section 1-1

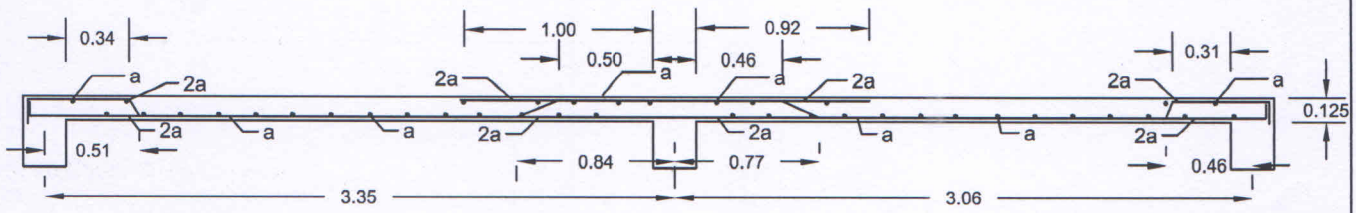

Section 2-2

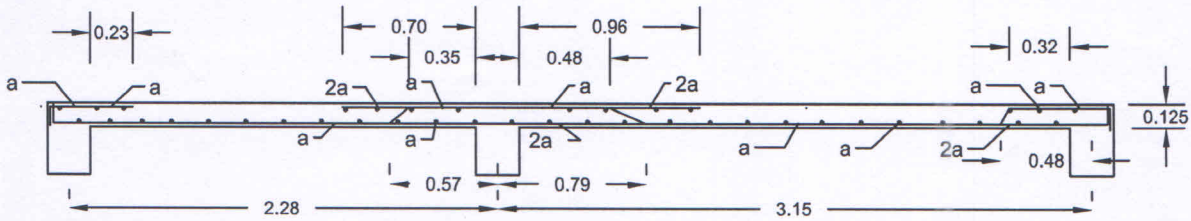

Section 3-3

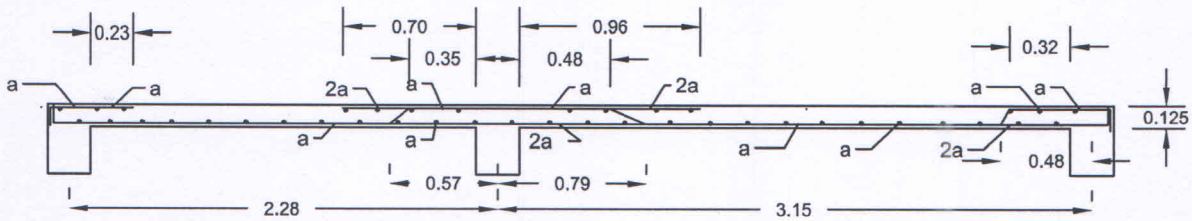

Section 4-4

- Clear cover the slab should be 20mm.
- All dimensions are in meter

SCHEDULE OF BARS
a. 8 mm Ø @ 150 mm c/c

DRG. No. - NIT/CED/2017/PMAY - OP3-RCC-FR-Z V /DWG-4
NATIONAL INSTITUTE OF TECHNOLOGY HAMIRPUR
BUILDING NAME: PMAY HFA OPTION 3 REINFORCED CONCRETE BUILDING FLAT ROOF ZONE V
DRAWING TITLE: SLAB DETAILS
DESIGNED BY: Dr. Pardeep Kumar Dr. Hemant Kumar Vinayak

Dr. Hemant Kumar Vinayak
Assistant Professor
Department of Civil Engineering
National Institute of Technology,
Hamirpur -177005 (H.P.)

Dr. Pardeep Kumar
Associate Professor (Structural Engg.)
Civil Engineering Department
NIT, Hamirpur (H.P.)-177005